Operator's Manual
SUPPLEMENT

MANCO MODEL NO.

400

FILE

JUL 22 1991

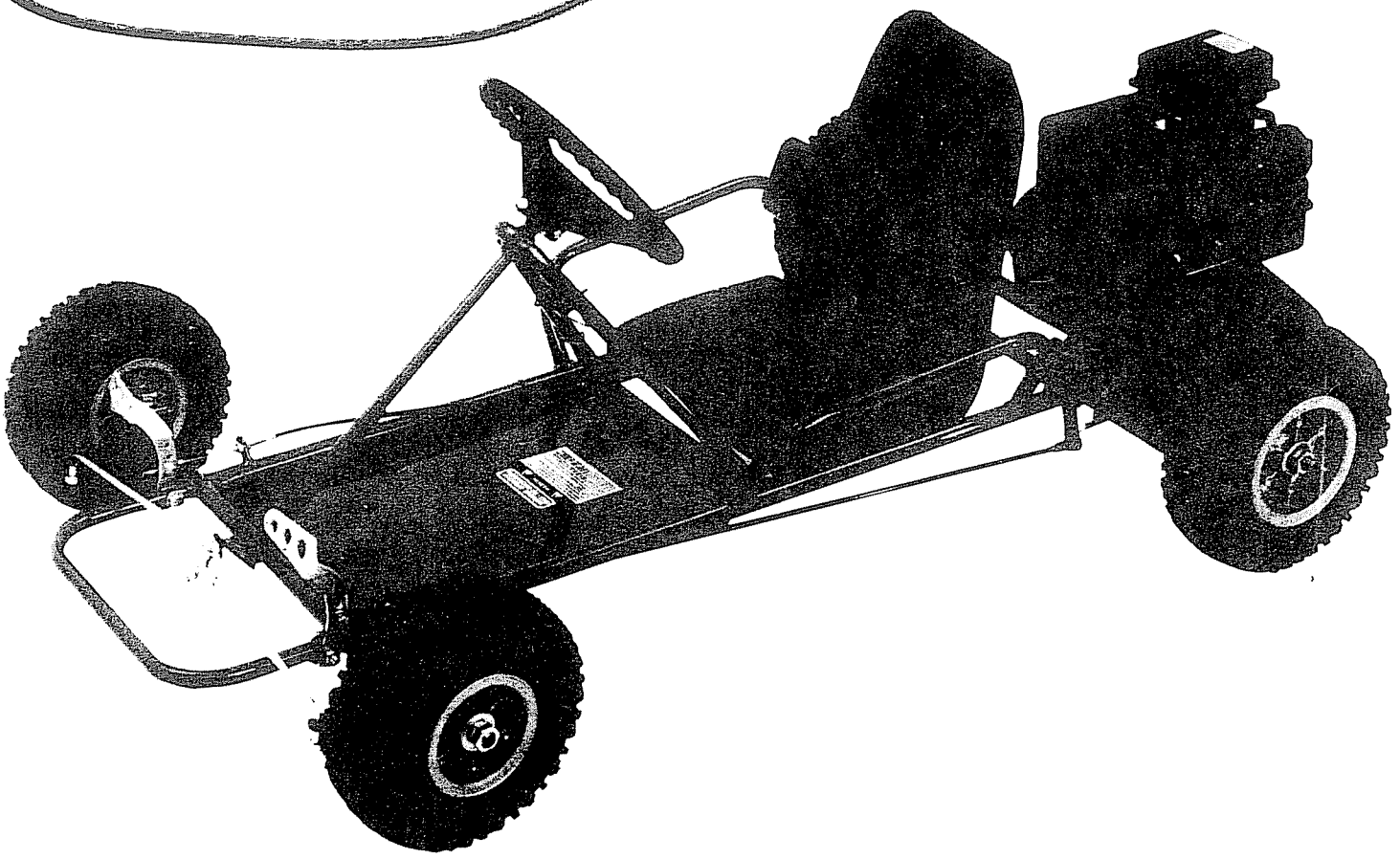

MANCO PRODUCTS, INC.

4404 Engle Ridge Drive Ft Wayne, Indiana 46804 219-432-1596

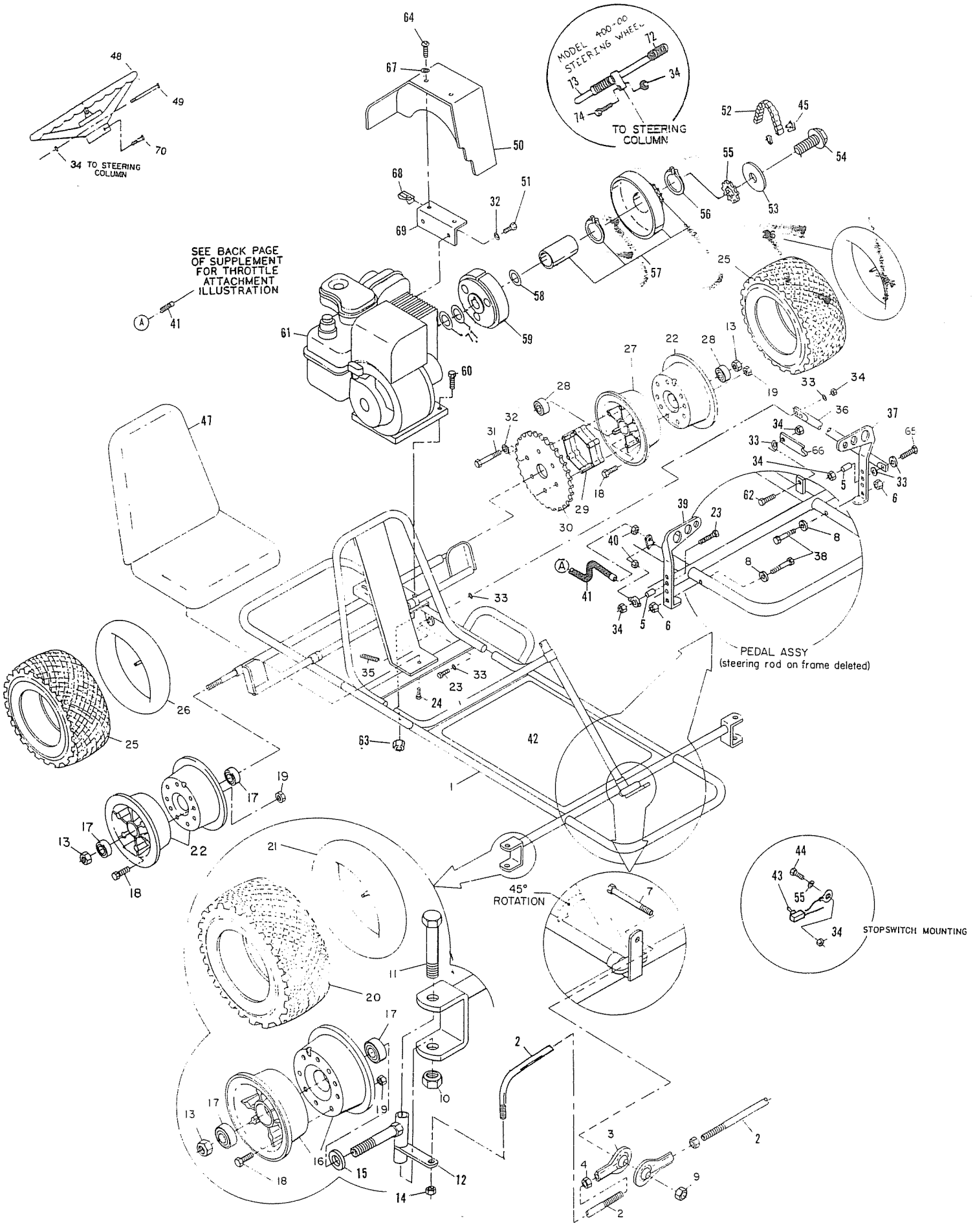
MODEL 400-00 STEERING WHEEL
TO STEERING COLUMN
34 TO STEERING COLUMN
SEE BACK PAGE OF SUPPLEMENT FOR THROTTLE ATTACHMENT ILLUSTRATION
PEDAL ASSY
(steering rod on frame deleted)
45° ROTATION
STOPSWITCH MOUNTING

REPAIR PARTS

Model 400

REF. NO.	PART NO.	DESCRIPTION
1	5980-19	Frame
ASM	4354	Tie Rod Assembly (incl ref nos 2-4)
2	4353	Tie Rod 10⅞ Hooked
3	1414	Rod End
4	9092	⅜-24 Hex Jam Nut
5	1389	Bushing
6	1189	5/16-18 Hex Lock Nut
7	9158	⅜-16 x 2¼ Hex Cap Screw
8	9091	⅜ Flat Washer
9	9085	⅜-16 Hex Lock Nut
10	1012	½-13 Hex Lock Nut
11	1264	½-13 x 3½ Hex Cap Screw
12	8021	Spindle-Right Hand
NI	8020	Spindle-Left Hand
13	1046	⅝-11 Hex Lock Nut
14	9092	⅜-24 Hex Jam Nut
15	1650	⅝ I.D. Flat Washer
ASM	2243	Front Wheel Assembly-4" (incl. ref nos 16-21)
16	5158	Wheel Half-4"
17	1419	Bearing
18	5839	¼-20 x ¾ Hex Whizlock Screw
19	1186	¼-20 Hex Whizlock Nut
20	2244	Tire - 4.10-3.50 x 4" Stud Tread
21	1053	Tube - 4.10-3.50 x 4"
ASM	4337	Drive Wheel Assembly-5" (incl. ref. nos 22,23,25-32)
22	8004	Wheel Half-5" Untapped
23	5839	¼-20 x ¾ Hex Cap Screw
24	1876	¼-20 x ⅝ Hex Whizlock Screw
25	2246	Tire - 4.10-3.50 x 5" Stud Tread
26	1753	Tube - 4.10-3.50 x 5"
27	8006	Wheel Half - 5" Tapped
28	1093	Bearing - Drive Wheel
29	8008	Spacer - Sprocket
30	8007	Sprocket - 60 Tooth
31	9151	5/16-18 x 2¼ Hex Cap Screw
32	9030	5/16 Internal Lock Washer
ASM	2247	Idler Wheel Assembly - 5" (incl. ref. nos 17-19,22,25,26)
33	1854	¼ Flat Washer
34	9057	¼-20 Lock Nut
35	4365	Spring - Brake Return
36	5982-2	Brake Rod
37	8009	Pedal - Brake
38	9110	⅜ Shoulder Bolt
39	8011	Pedal — Throttle
40	9058	5/16-24 Hex Jam Nut
41	1390	Cable - Throttle (incl. ref. no. 40)
NI	1019	Ty-wrap
42	—	Not Used
43	1392	Stop Switch
44	9006	¼-20 x ½ Hex Whizlock Screw
45	1269	Masterlink - #35 Chain
46	—	Not Used
47	1976	Seat
48	6038	Steering Wheel
49	9080	¼-20 x 2¾ Hex Cap Screw
50	3362	Chainguard
51	9101	5/16-24 x ½ Nylok Cap Screw
52	6073	Chain - #35 x 72 Pitch (incl. ref. no. 45)
53	1943	Fender Washer
54	5733	¼-28 x ¾ Hex Flanged Whizlock Screw
55	5732	¼ Internal/External Lock Washer
ASM	4335	Clutch (incl. ref. nos. 56-59)
56	3141	Snap Ring - Clutch Shaft
57	4491	Drum w/Sprocket
58	3146	Fiber Washer - Clutch
59	4496	Clutch Center
60	1122	5/16-18 x 1½ Hex Cap Screw
61	8049	Engine - 3 HP
62	1845	¼-20 x ⅝ Hex Cap Screw
63	1263	5/16-18 Hex Flanged Whizlock Nut
64	6046	10-24 x ½ Truss Head Screw
65	1847	¼-20 x 1 Hex Cap Screw
66	1982	Pedal Latch - Parking Brake
67	6039	10-24 Lock Washer
68	5135	10-24 Tinnerman Nut
69	3363-2	Chainguard Mounting Bracket
70	9160	¼-20 x 1 Hex Cap Screw w/Nylok
71	1168	Steel Washer ¾ ID
72	1980	Steering Wheel Grip
73	1977	Steering Wheel
74	1064	¼-20 x 1¼ Hex Cap Screw

ASM = Assembly Complete
NI = Not Illustrated

THROTTLE CABLE INSTALLATION

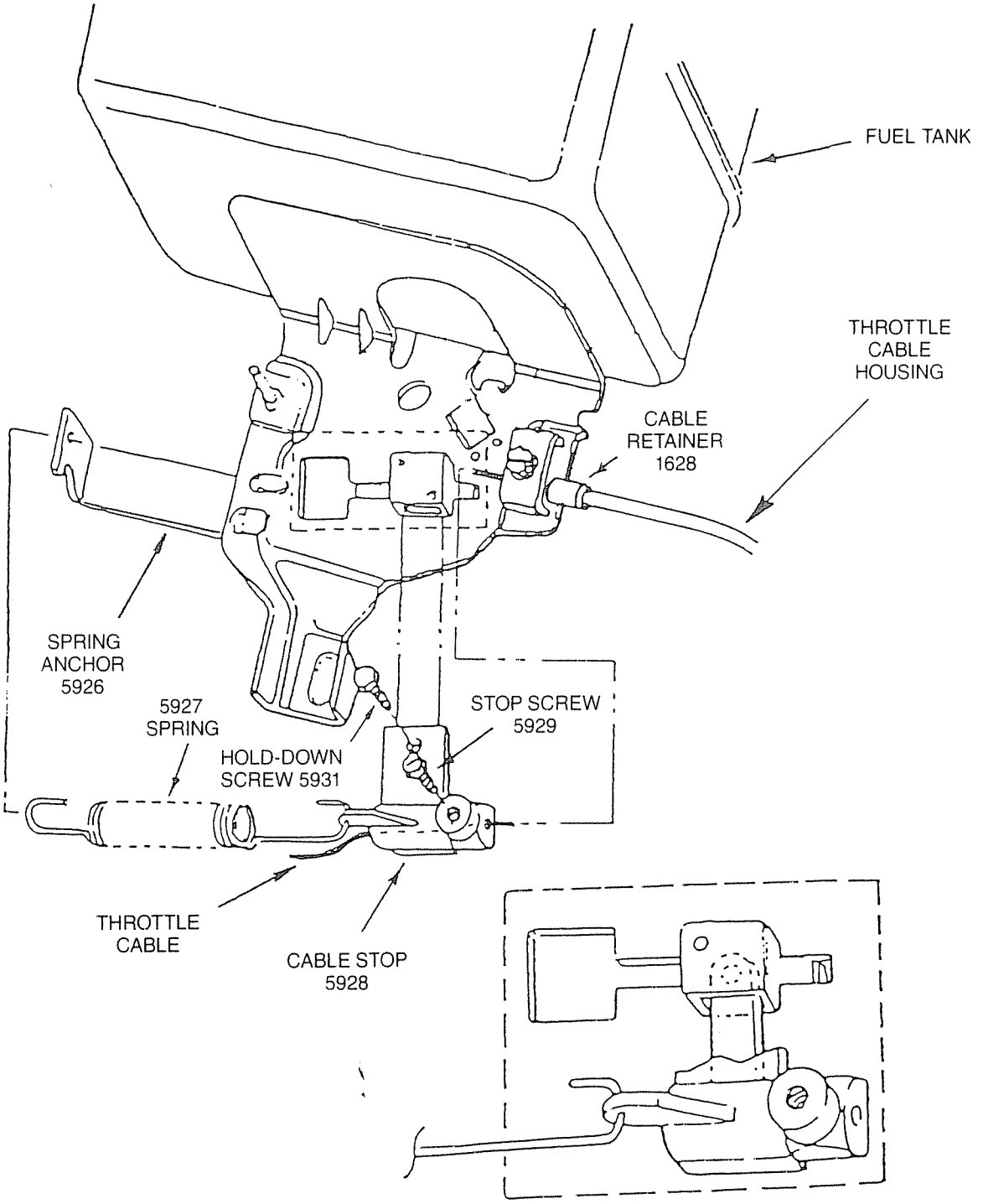

ASSEMBLY: Pass the throttle cable through the cable retainer and butt the throttle cable housing end against the inside shoulder of the cable retainer. (The cable retainer is to be securely fastened to the engine with the clamping screw.) Pass the end of the Throttle Cable through the hole in the cable stop. Before tightening cable stop screw:

1. Ensure spring anchor, spring, and cable are installed as illustrated above.
2. Ensure throttle pedal is in rearward (idle) position.
3. Ensure that there is no slack in the throttle cable with *no* tension applied to return spring.
4. Ensure cable housing is inside and against the cable retainer.